SERVICE MANUAL

KENWOOD

KA-747

STEREO INTEGRATED AMPLIFIER

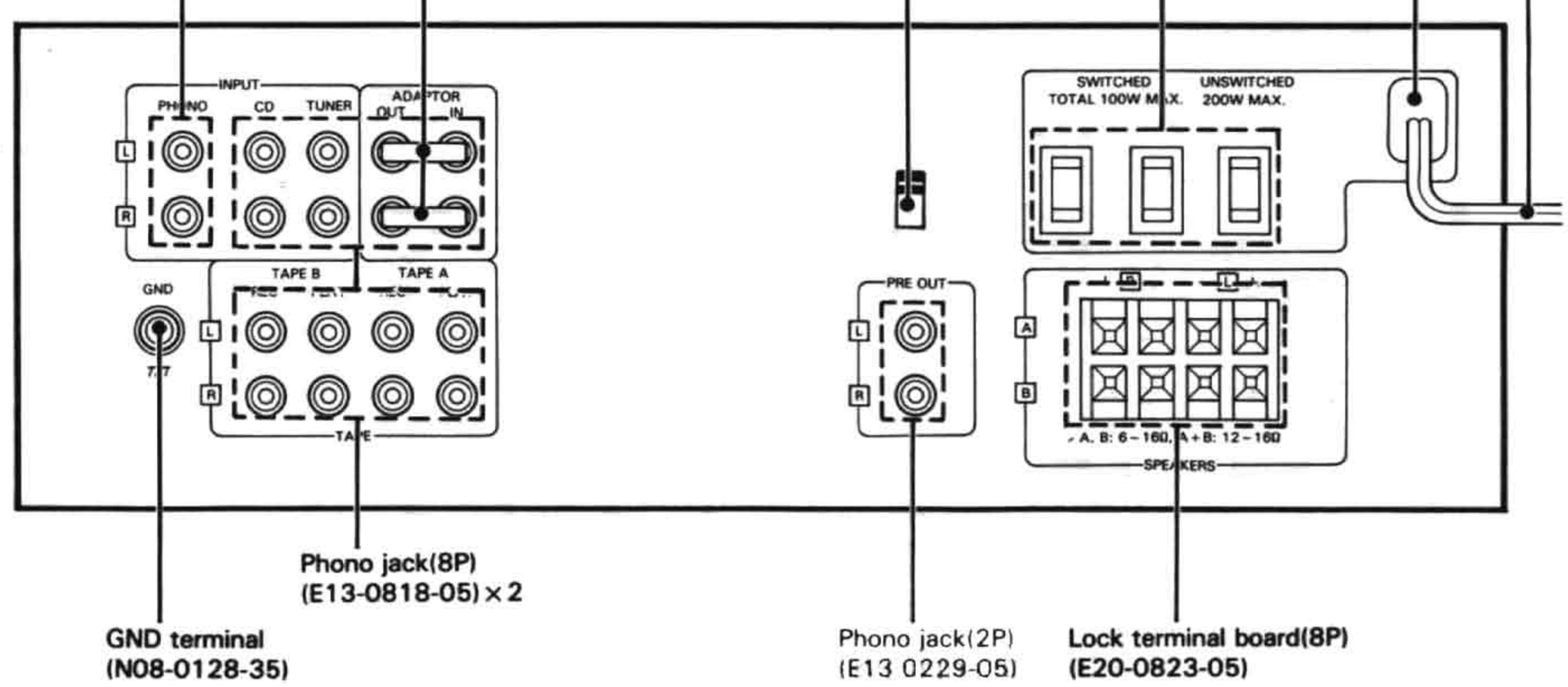

* Refer to Parts List on page 6.

BLOCK DIAGRAM

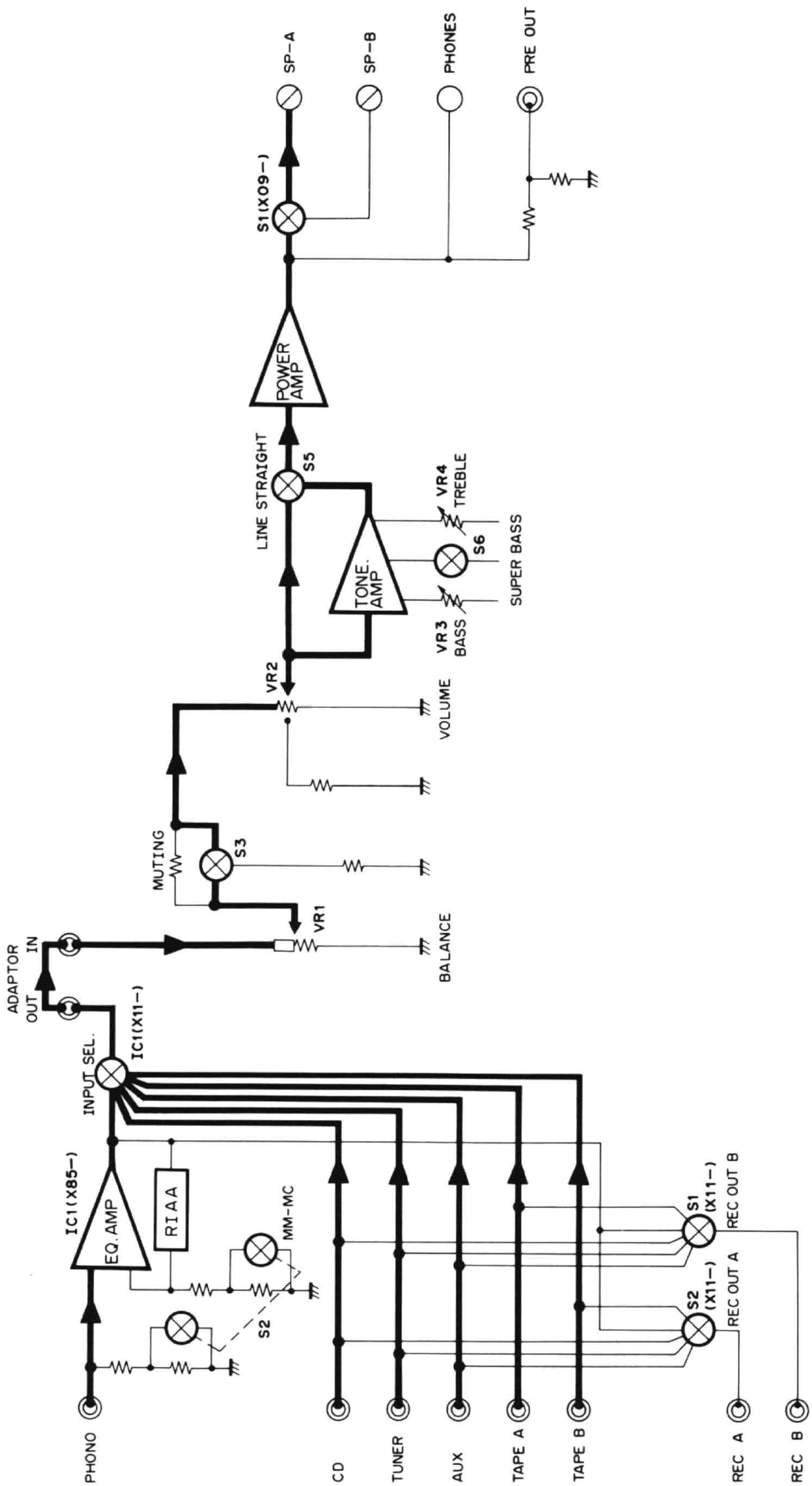

CIRCUIT DESCRIPTION

DESCRIPTION OF ELEMENTS

Audio unit (X09-2232-71)

Elements	Use & Function	Operation, Condition & Interchangeability
Q1,2	Temperature compensation	
Q3~6	Driver	
Q9~12	Driver	
Q7,8,12,14	Final	
Q15~18	Current limiter	Final protection in case of overload drive.
Q21	Protection driver	Turns the relay OFF when current limiters are activated.
Q22~25	Equalizer amp constant-voltage circuit	Feedback-type constant-voltage circuit is inserted in the B line towards the EQ circuit.
Q26,27	Fast OFF transistors for EQ amp constant-voltage circuit	Turn −B to 0 V before +B
Q28	Lamp driver	
IC 1	Protection IC	This circuit turns the relay OFF in case of amplifier abnormality

Tone unit (X11-2222-72)

Elements	Use & Function	Operation, Condition & Interchangeability
Q1,2	IC 1 constant-voltage supply	2SC2003, 2SA954
Q3~6	IC 1 control	
Q7,8	Muting during INPUT switching	
Q1	IC 1 control	
D1~36	Static slsctricity protection	IS2076, IS2076A, IS1555, ISS178, ISS131
D37~48	IC 1 control	IS2076, IS2076A, IS1555, ISS178, ISS131
D49~52	Backup power supply switching	IS2076, IS2076A, IS1555, ISS178, ISS131
D53~62	Static electricity protection	IS2076, IS2076A, IS1555, ISS178, ISS131
D63	Muting shock noise prevention	IS2076, IS2076A, IS1555, ISS178, ISS131
D64,65	Static electricity protection	
D66	IC 1 control	IS2076, IS2076A, IS1555, ISS178, ISS131
D67	Prevention of erroneous LED lighting at POWER ON	W06B
D70	Backup capacitor charging power supply	
D71,72	Lamp overvoltage prevention	
D73,74	Tone amp power supply	
D75	LED power supply	
D77,78	MM/MC indicator LEDs	
D79	INPUT indicator LEDs	
D80~85	LINE STRAIGHT indicator LED	
D87~93	Static electricity protection	
IC 1	Input switching	
IC 2	Tone amp	

Pre amplifier unit (X85-1010-10)

Elements	Use & Function	Operation, Condition & Interchanegability
Q5~8	EQ circuit 1st stage differential amp	
IC 1	EQ circuit opamp IC	

CIRCUIT DESCRIPTION

Main amplifier unit (X85-1070-01)

Elements	Use & Function	Operation, Condition & Interchangeability
Q1 ~ 4	A class 1st stage differential amp	
Q5 ~ 8	Current Miller circuit	
Q13,14	1st stage constant-surrent circuit	
Q15,16	Amplifier stage constant-current circuit	
Q17,18	A class amplifier stage	
Q19,20	Amplifier stage cascode circuit	

Input Selector IC (LC7818)

A 6-input switching circuit is made up using input switching IC L7818 which has 5 inputs + tape monitor functions. The IC is used as a 6-input IC by using its auto function switching feature (with which the tape monitor switch is turned OFF by pressing one of the input select keys while the tape monitor switch is ON). The tape monitor is turned OFF by turning MIN to "H" while $\overline{\text{INIT}}$ is "H" MIN is turned "H" when Q3 and the diode connected to its base detect that one of keys $\overline{\text{ACTL}}$ to ECTL is pressed.

When LC7818 is used alone, the tape monitor condition is reversed each time $\overline{\text{TMCTL}}$ turns "L". To prevent this, Q2 is used so that key inputs are not accepted as long as the tape monitor function is ON. To prevent simultaneous lighting of the tape monitor LED and an LED of another input, the Q1 transistor switch is used so that other LEDs go off when the tape monitor LED lights. All these controls are performed via tape monitor LED terminal $\overline{\text{TMOUT}}$. Q4 and Q5 are used to shift the level of the MUTE control signal, from between 0 V and 18 V to between −18 V and +18 V.

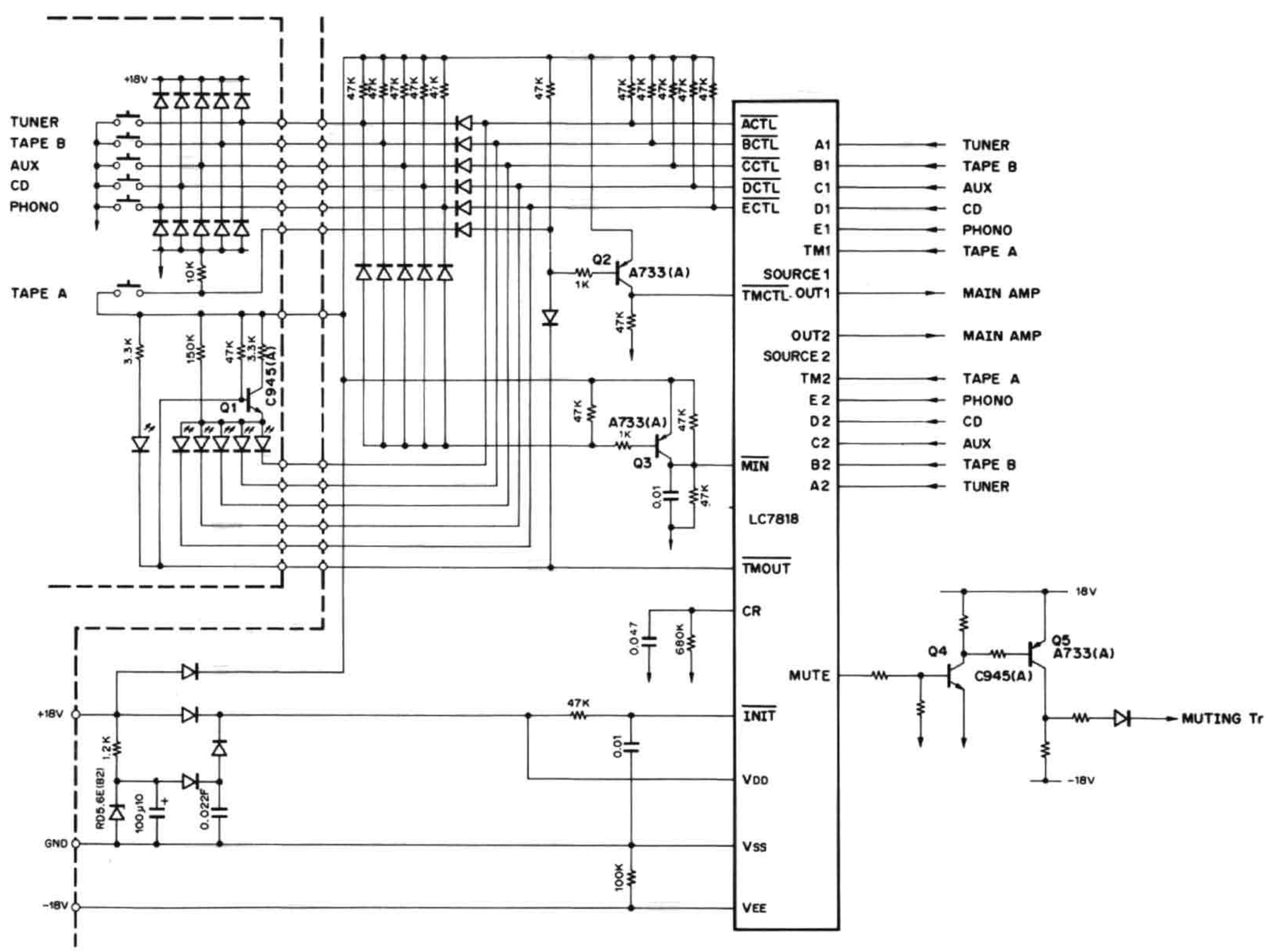

ADJUSTMENT/REGLAGES/ABGLEICH

ADJUSTMENT

No.	ITEM	INPUT SETTINGS	OUTPUT SETTINGS	AMPLIFIER SETTINGS	ALIGNMENT POINTS	ALIGN FOR	FIG.
1	IDLE CURRENT	–	Connect a DC voltmeter across CP1 (L) CP2 (R)	VOLUME: 0	VR1 (L) VR2 (R)	13mV	(a)

REGLAGES

N°	ITEM	REGLAGE DE L'ENTREE	REGLAGE DE LA SORTIE	REGLAGE DE L'AMPLIFICATEUR	POINS L'ALIGNEMENT	ALIGNER POUR	FIG.
1	COURANT DE POLARISATION	–	Connecter un voltmètre de CC sur CP1 (G) CP2 (D)	VOLUME: 0	VR1 (G) VR2 (D)	13mV	(a)

ABGLEICH

NR.	GEGENSTAND	EINGANGS-EINSTELLUNG	AUSGANGS-EINSTELLUNG	VORSTÄRKER EINSTELLUNG	ABGLEICH-PUNKTE	ABGLEICHEN FÜR	ABB.
1	LEERLAUFSTROM	–	Einen Gleichspannungs-messer über CP1 (L) CP2 (R) anschließen.	VOLUME: 0	VR1 (L) VR2 (R)	13mV	(a)

(a) DC voltmenter

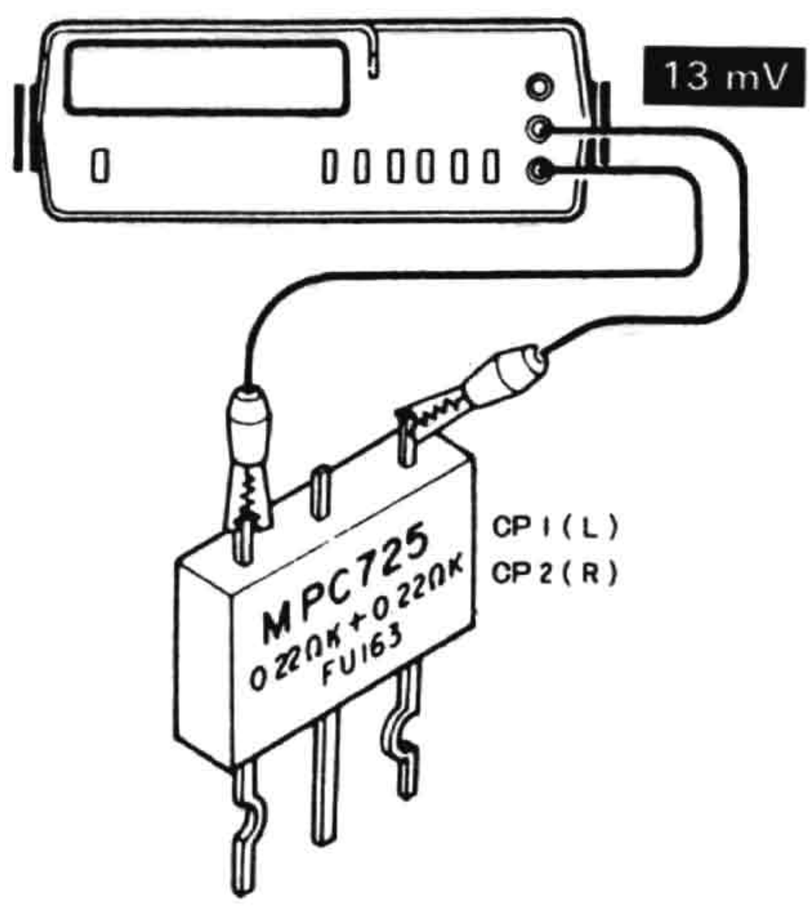

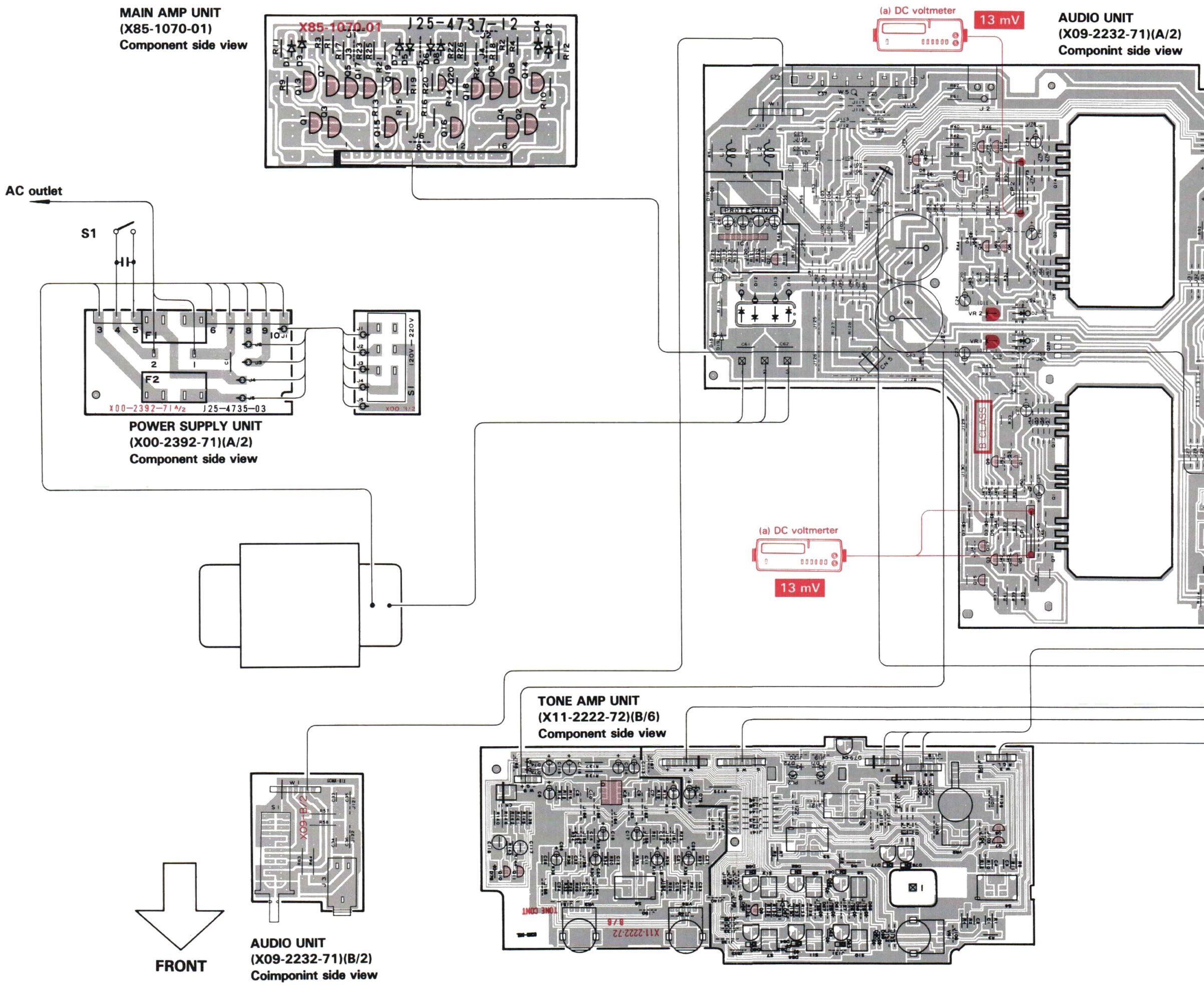
MAIN AMP UNIT
(X85-1070-01)
Component side view
X85-1070-01
J25-4737-12
(a) DC voltmeter
13 mV
AUDIO UNIT
(X09-2232-71)(A/2)
Componint side view
AC outlet
S1
F1
F2
X00-2392-71 A/2
J25-4735-03
POWER SUPPLY UNIT
(X00-2392-71)(A/2)
Component side view
120V — 220V
(a) DC voltmerter
13 mV
B CLASS
TONE AMP UNIT
(X11-2222-72)(B/6)
Component side view
X09-B/2
FRONT
AUDIO UNIT
(X09-2232-71)(B/2)
Coimponint side view

C BOARD

UNIT
232-71)(A/2)
int side view

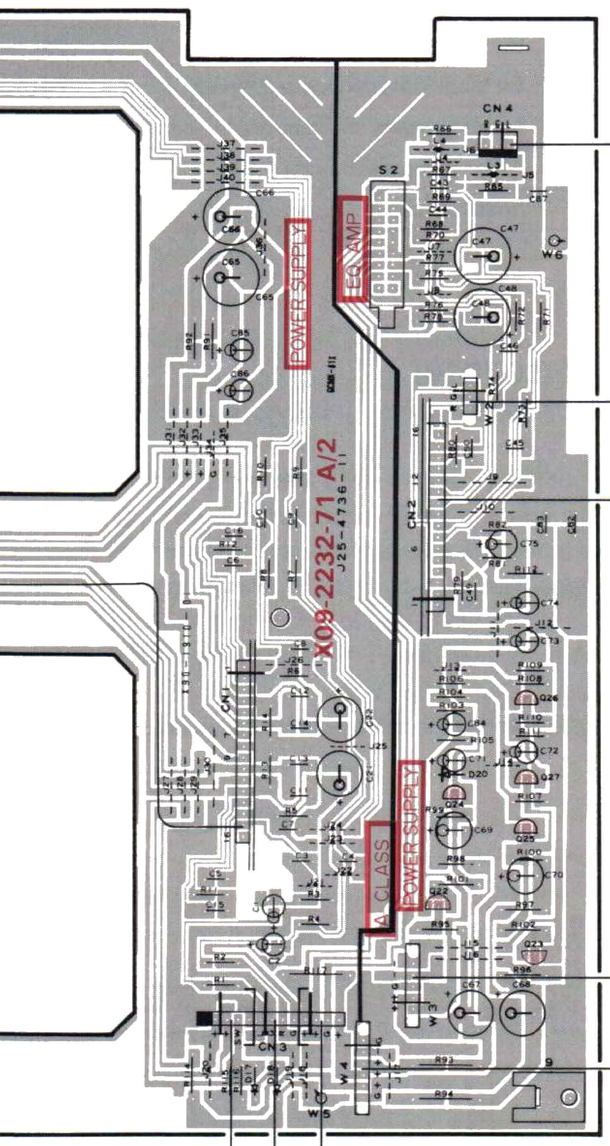

TONE AMP UNIT
(X11-2222-72)(A/6)
Component side view

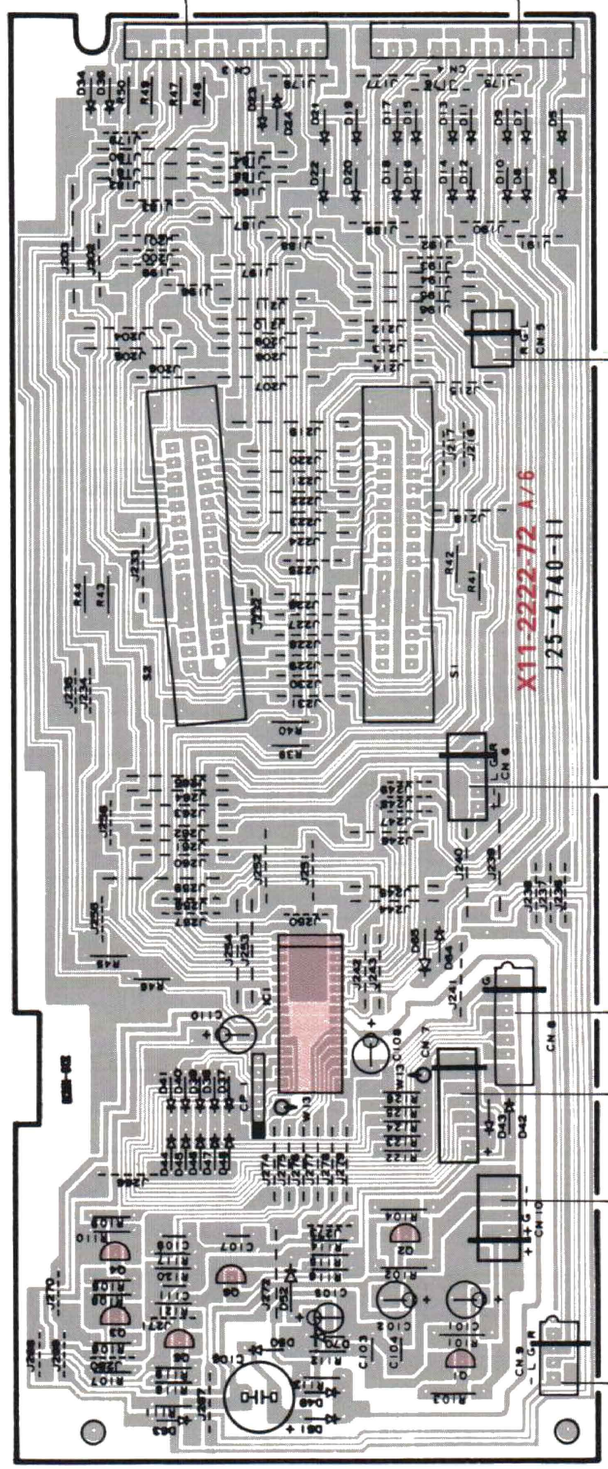

TONE AMP UNIT (X11-2222-72)(C/6)
Component side view

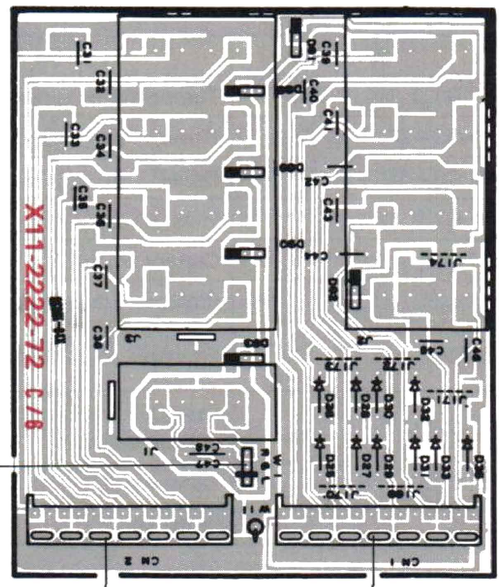

TONE AMP UNIT
(X11-2222-72)(D/6)
Component side view

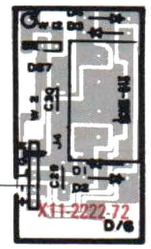

PRE AMP UNIT (X85-1010-10)
Componint side view

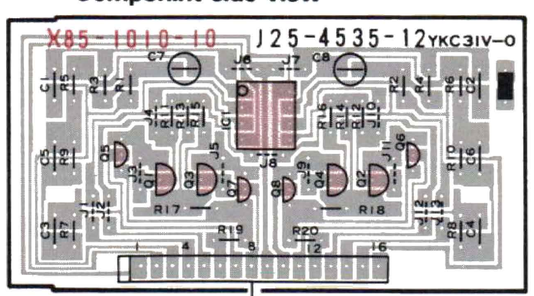

X09-2232-71 (A/2)

Q1,2		Q3,4		Q5,6		Q7,8		Q9,10	
E	−1.6 V	E	–	E	–	E	–	E	–
C	1.7 V	C	46 V	C	46 V	C	46 V	C	−46 V
B	–	B	1.7 V	B	–	B	–	B	−1.8 V

Q11,12		Q13,14		Q21		Q22		Q23	
E	–	E	–	E	46 V	E	18 V	E	−18.4 V
C	−46 V	C	−46 V	C	0 V	C	38.5 V	C	−37.7 V
B	–	B	–	B	–	B	–	9	0V

Q24		Q25		Q26		Q27		Q28	
E	5.1 V	E	0 V	E	18 V	E	0 V	E	0.6 V
C	18.5 V	C	−18.9 V	C	–	C	−18.9 V	C	19.6 V
B	–	B	–	B	–	B	–	B	1.2 V

IC1

2	0 V	7	2.1 V
3	0 V	8	3.2 V
4	2 V		
5	0 V		

X85-1010-

IC1

4	−17.1 V
8	18 V

Refer to the schematic diagram for the values of resistors and capacitors.
The PC board drawing is viewing from the side easy to check.

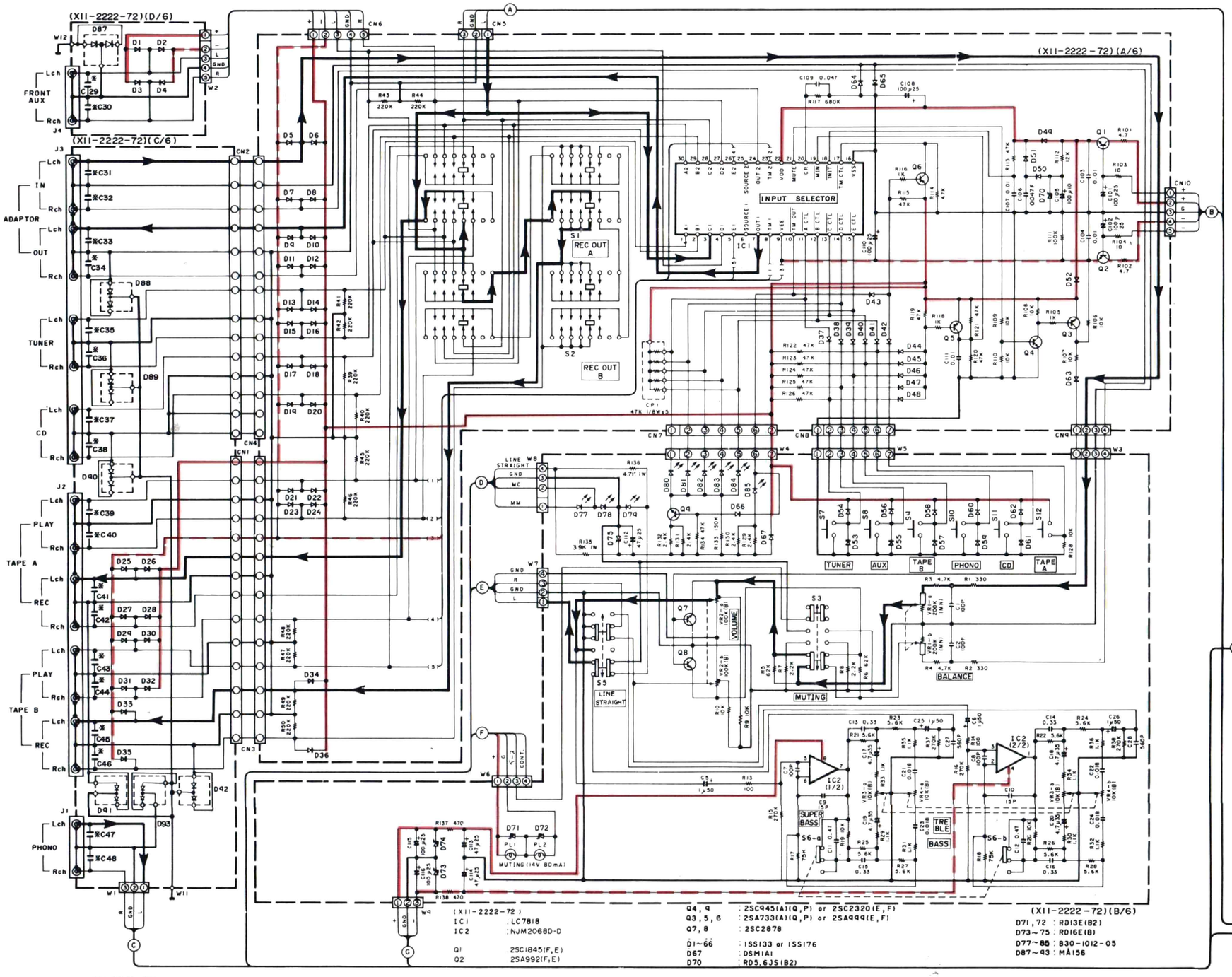

(X09-2232-71)

IC1 : μPC1237H
Q1,2 : 2SC3419(Y)
Q3,4 : 2SC1845(F,E) or 2SC1980(S,T)
Q5,6 : 2SC2590(Q,R,S)
Q7,8 : 2SC2837 *5
Q9,10,21 : 2SA992(F,E)
Q11,12 : 2SA1110(Q,R,S)
Q13,14 : 2SA1186 *5
Q15,16 : 2SC1845(F,E) or 2SC1980(S,T)
Q17,18,25~27 : 2SA733(A) (Q,P), 2SA999(E,F) or 2SA1127NC(R,S)
Q22 : 2SD882(Q,P)
Q23 : 2SB772(Q,P)
Q24 : 2SC945(A)(Q,P), 2SC2320(E,F) or 2SC1685(R,S)
Q28 : 2SD1266(Q,P)
D1,2
D3~8,15,16
D11~14
D17,18
D19
D20

(X09-2232-71) (A/2)

(XII-2222-72)

IC1 : LC7818
IC2 : NJM2068D-D
Q1 : 2SC1845(F,E)
Q2 : 2SA992(F,E)
Q4,9 : 2SC945(A)(Q,P) or 2SC2320(E,F)
Q3,5,6 : 2SA733(A)(Q,P) or 2SA999(E,F)
Q7,8 : 2SC2878
D1~66 : 1SS133 or 1SS176
D67 : DSM1A1
D70 : RD5.6JS(B2)
D71,72 : RD13E(B2)
D73~75 : RD16E(B)
D77~86 : B30-1012-05
D87~93 : MA156

(XII-2222-72)

	0-01	2-72
C29-46	NOT USE	390P
C47, 48	NOT USE	470P

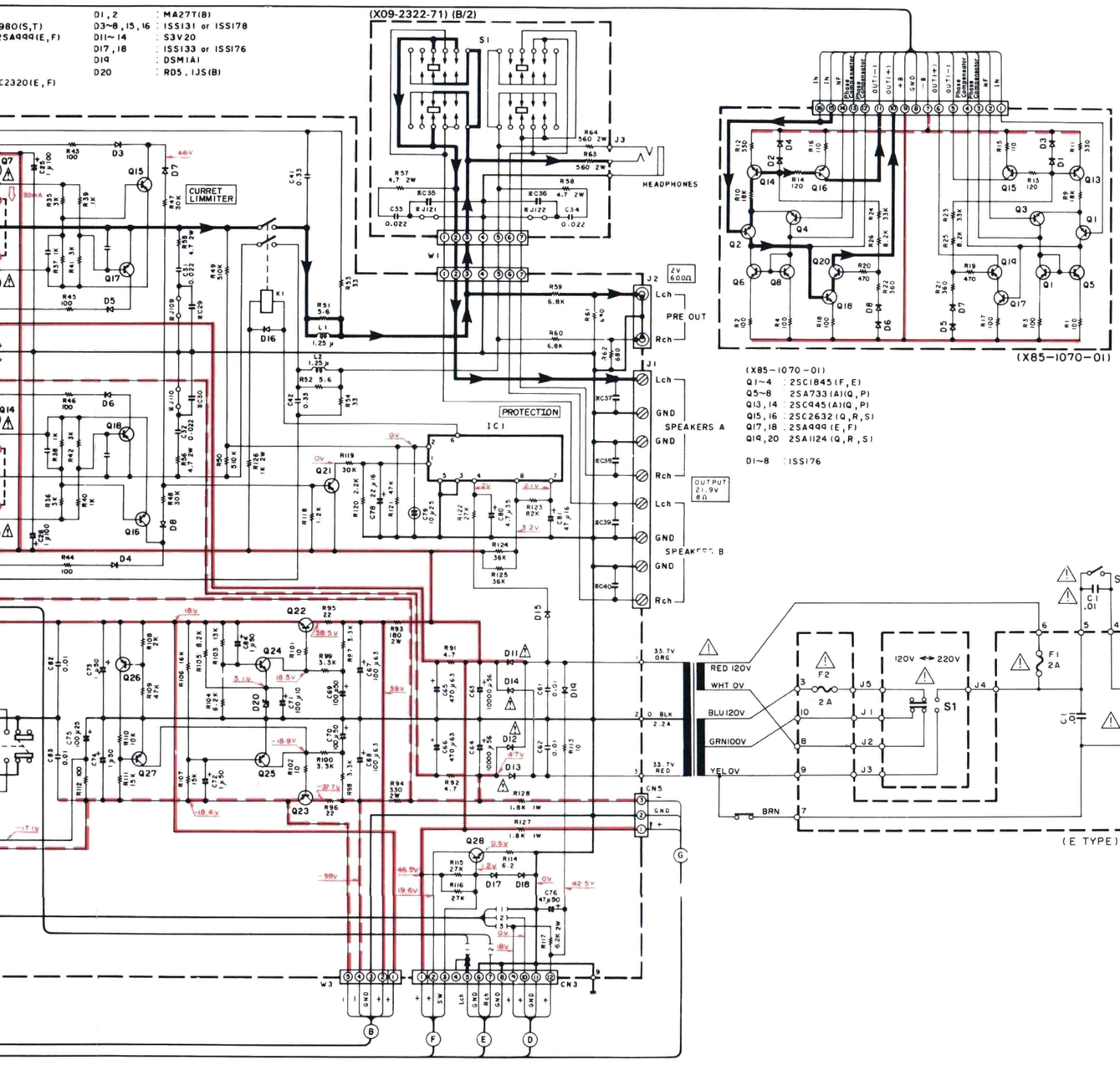

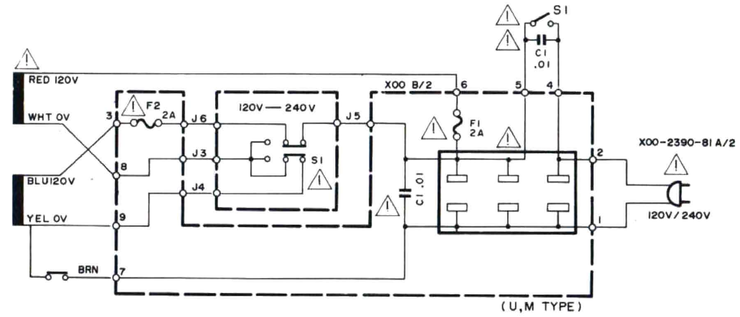

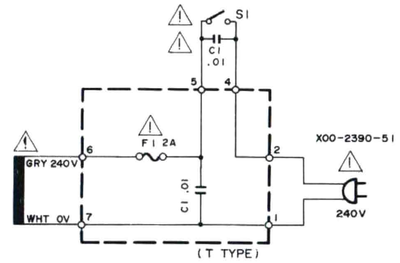

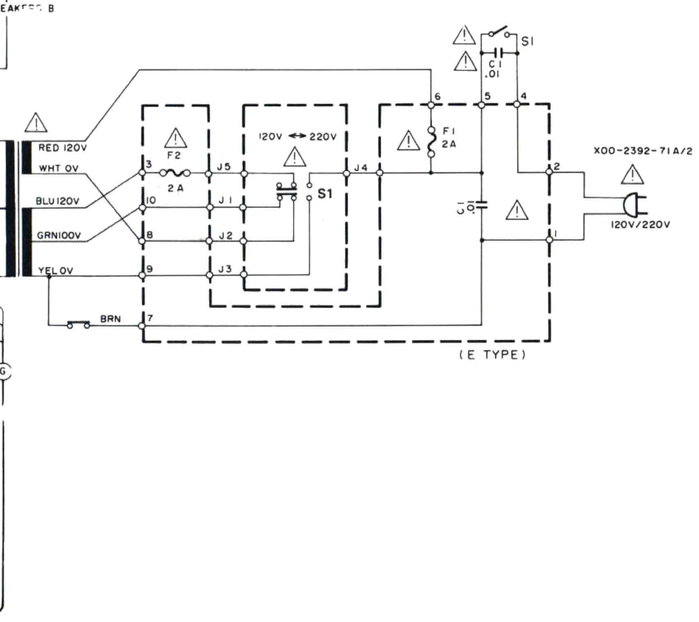

(X09-2232-71)

	0-00	2-71
R65,66	—	2.2 KΩ
R73,74	330 Ω	100 Ω
C15,16	330 pF	1000 pF
C5,6	—	100 pF
C7,8	—	100 pF
C29,30 35,36	—	0.047μF
C37-40	—	4700 pF
C45,46	100 pF	220 pF
J5,6	○	—
J109,110 121,122	○	—
L3,4	—	100 μH
C87	—	82 pF

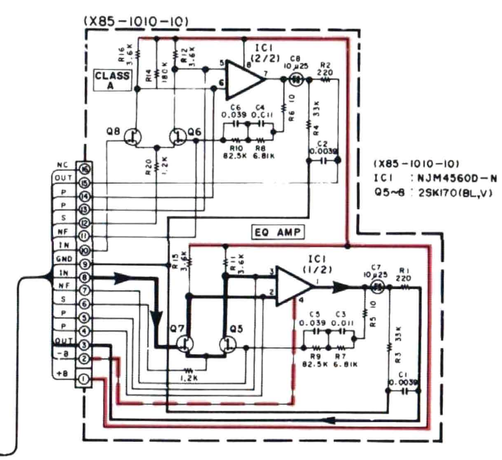

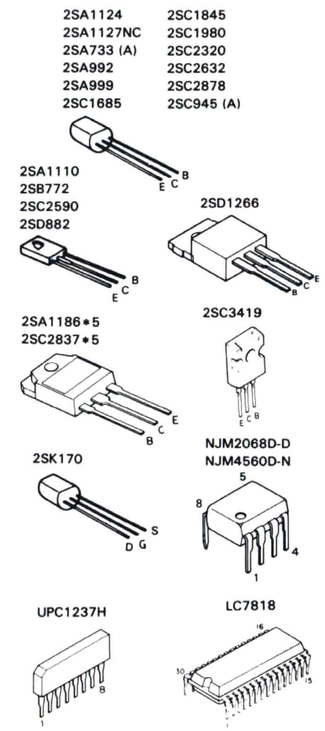

CAUTION: For continued safety, replace safety critical components only with manufacturer's recommended parts (refer to parts list). ⚠ Indicates safety critical components. To reduce the risk of electric shock, leakage-current or resistance measurements shall be carried out (exposed parts are acceptably insulated from the supply circuit) before the appliance is returned to the customer.

KA-747(E)

■ **This circuit is a standard circuit, but is subject to change without notice.**

DC voltages are as measured with a high impedance voltmeter with no signal input. Values may vary slightly due to variations between individual instruments or/and units.

Les tensions c.c. doivent être mesurées avec un voltmètre à haute impédance sans signal d'entrée. Les valeurs peuvent différer légèrement du fait des variations inhérentes aux appareils et aux instruments de mesure individuels.

Die angegebenen Gleichspannungswerte wurden mit einem hochohmigen Spannungsmesser ohne Eingangssignal gemessen. Dabei schwanden die Meßwerte aufgrund von Unterschieden zwischen einzelnen Instrumenten oder Geräten u.U. geringfügig.

KA-747

KENWOOD

EXPLODED VIEW

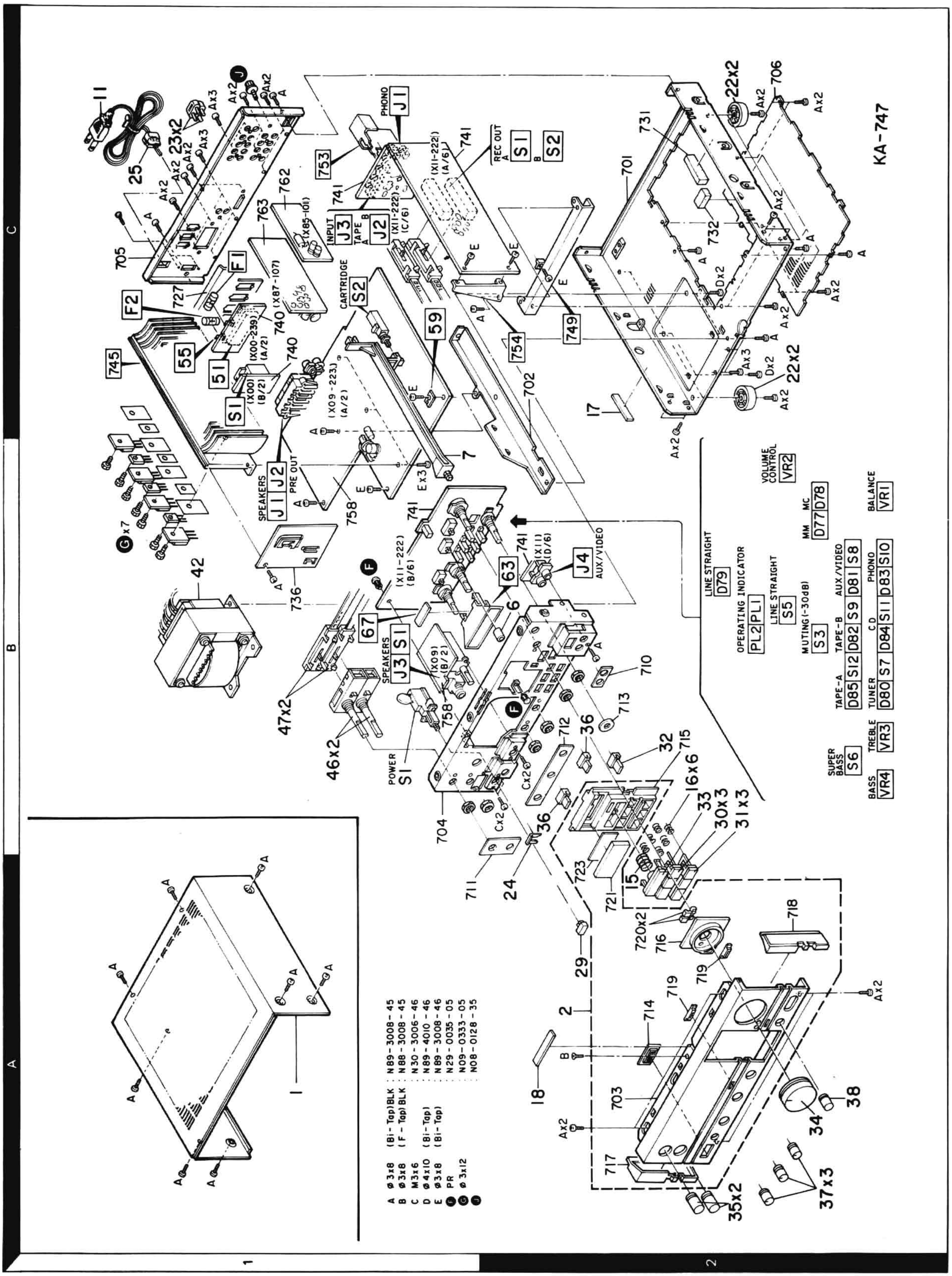

Parts with exploded number larger than 700 are not supplied.

PARTS LIST

* New Parts
Parts without **Parts No.** are not supplied.
Les articles non mentionnes dans le **Parts No.** ne sont pas fournis.
Telle ohne **Parts No.** werden nicht geliefert.

Ref. No. 参照番号	Address 位置	New Parts 新	Parts No. 部品番号	Description 部品名／規格	Destination 仕向	Remarks 備考
			KA-747			
1	1A		A01-1446-01	METALLIC CABINET		
2	2A	*	A20-4622-02	PANEL ASSY	UMUEE	
2	2A	*	A20-4624-02	PANEL ASSY	T	
-			B46-0094-03	WARRANTY CARD	UUE	
-			B46-0095-03	WARRANTY CARD	UUE	
-			B46-0122-13	WARRANTY CARD	E	
-			B46-0123-03	WARRANTY CARD	T	
-		*	B50-6015-00	INSTRUCTION MANUAL(ENGLISH)	UMUEE	
-		*	B50-6016-00	INSTRUCTION MANUAL(FRENCH)	ME	
-		*	B50-6017-00	INSTRUCTION MANUAL(ENGLISH)	T	
-		*	B50-6018-00	INSTRUCTION MANUAL(G,D,S)	E	
-		*	B50-6019-00	INSTRUCTION MANUAL(SPANISH)	M	
-			B58-0222-14	CAUTION CARD (PRE-SET 220V)	UE	
-			B58-0223-04	CAUTION CARD (PRE-SET 120V)	U	
-			B58-0245-33	CAUTION CARD (FTZ)	E	
-			B59-0092-00	SERVICE DIRECTORY	UUE	
⚠ C1 ,2			C91-0023-05	CERAMIC 0.01UF AC250V	UMUE	
⚠ C1 ,2			C91-0647-05	CERAMIC 0.01UF P	TE	
6	2B		D21-1102-04	EXTENSION SHAFT		
7	1B		D21-1103-03	EXTENSION SHAFT		
⚠ 11	1C		E30-0459-05	AC POWER CORD	E	
⚠ 11	1C		E30-0685-05	AC POWER CORD	UMUE	
⚠ 11	1C		E30-1416-05	AC POWER CORD	T	
⚠ F1	1C		F06-2021-05	FUSE (SEMKO) (250V T2A)	TE	
⚠ F1 ,2	1C		F05-2023-05	FUSE (250V 2A)	UMUE	
15	2A		G01-0489-04	COMPRESSION SPRING		
16	2B		G01-1767-04	COMPRESSION SPRING		
17	2C		G11-0130-04	SOFT TAPE (40X6X5)		
18	2A		G13-0439-04	CUSHION		
-		*	H01-7028-04	ITEM CARTON CASE	UMUEE	
-		*	H01-7029-04	ITEM CARTON CASE	T	
-			H10-1787-04	POLYSTYRENE FOAMED FIXTURE		
-			H10-1842-02	POLYSTYRENE FOAMED FIXTURE		
-			H10-1843-02	POLYSTYRENE FOAMED FIXTURE		
-			H12-1123-04	PACKING FIXTURE		
-			H25-0223-04	PROTECTION BAG (750X350)		
-			H25-0232-04	PROTECTION BAG (235X350)		
22	2C		J02-0129-05	FOOT		
23	1C		J12-0094-05	PIN		
24	2A		J21-3326-05	JACK MOUNTING HARDWARE		
⚠ 25	1C		J42-0083-05	POWER CORD BUSHING		
-			J61-0307-05	WIRE BAND		
29	2A		K27-1207-04	KNOB (BUTTON) POWER		
30	2B		K27-1539-04	KNOB (BUTTON) TAPE,AUX/VIDEO		
31	2B		K27-1540-04	KNOB (BUTTON) TUNER,CD,PHONO		
32	2B		K27-1541-04	KNOB (BUTTON) CARTRIDGE		
33	2B		K27-1590-03	KNOB (BUTTON) MUTING		
34	2A		K29-1548-04	KNOB VOLUME CONTROL		
35	2A		K29-1823-03	KNOB REC OUT		
36	2B		K29-2243-04	KNOB ASSY SUPER BASS,LINE		

E: Scandinavia & Europe H:Audio Club K: USA P: Canada
S: South Africa T: England U: PX(Far East, Hawaii)
UE : AAFES(Europe) X: Australia M: Other Areas

⚠ indicates safety critical components.

PARTS LIST

* New Parts
Parts without **Parts No.** are not supplied.
Les articles non mentionnes dans le **Parts No.** ne sont pas fournis.
Telle ohne **Parts No.** werden nicht gellefert.

	Ref. No. 参照番号	Address 位置	New Parts 新	Parts No. 部品番号	Description 部品名／規格	Destination 仕向	Remarks 備考
	37	2A		K29-2310-04	KNOB SPEAKER,TONE		
	38	2A		K29-2311-04	KNOB BALANCE		
⚠	42	1B	*	L01-6982-05	POWER TRANSFORMER	T	
⚠	42	1B	*	L01-6985-05	POWER TRANSFORMER	UMUE	
⚠	42	1B	*	L01-6986-05	POWER TRANSFORMER	E	
	F	1B,2B		N29-0035-05	PUSH RIVET (3.5X5.5)		
	J	1C		N08-0128-35	BINDING POST (GND)		
	46	1B		S90-0098-05	REMOTE SWITCH SHAFT (REC OUT)		
	47	1B		S90-0099-05	REMOTE WIRE (REC OUT)		
⚠	S1	1B		S40-1073-05	PUSH SWITCH (POWER)		
	POWER SUPPLY UNIT (X00-2392-71)						
⚠	C1			C91-0023-05	CERAMIC 0.01UF AC250V	UMUE	
⚠	C1			C91-0647-05	CERAMIC 0.01UF P	TE	
⚠	51	1C	*	E03-0077-05	AC OUTLET	UMUE	
	55	1C		J13-0041-05	FUSE CLIP	UMUE	
	55	1C		J13-0054-05	FUSE CLIP	TE	
⚠	S1	1C		S31-2083-05	SLIDE SWITCH (POWER TYPE)	UMUEE	
	AUDIO UNIT (X09-2232-71)						
	C1 ,2			CE04KW1H2R2M	ELECTRO 2.2UF 50WV		
	C3 -8			CC45FSL1H101J	CERAMIC 100PF J	E	
	C3 ,4			CQ09FS1H101JZS	POLYSTY 100PF J	UMUET	
	C9 ,10			CC45FSL1H120J	CERAMIC 12PF J	E	
	C9 ,10			C91-0167-05	POLYSTY 12PF K	UMUET	
	C11 ,12			CC45FSL1H010C	CERAMIC 1.0PF C		
	C13 ,14			CC45FSL1H180J	CERAMIC 18PF J		
	C15 ,16			CC45FSL1H331J	CERAMIC 330PF J	UMUET	
	C15 ,16			CK45FB1H102K	CERAMIC 1000PF K	E	
	C17 -20			CC45FSL1H331J	CERAMIC 330PF J		
	C21 ,22		*	CE04KW0J102M	ELECTRO 1000UF 6.3WV		
	C23 ,24			CE04KW1C220M	ELECTRO 22UF 16WV	E	
	C25 -28		*	CE04KW2A010M	ELECTRO 1.0UF 100WV		
	C29 ,30			CF92FV1H473J	MF 0.047UF J	E	
	C31 -34			CF92FV1H223J	MF 0.022UF J		
	C35 ,36			CF92FV1H473J	MF 0.047UF J	E	
	C37 -40			CK45FF1H472Z	CERAMIC 4700PF Z	E	
	C41 ,42			CF92FV1H334J	MF 0.33UF J		
	C45 ,46			CC45FSL1H101J	CERAMIC 100PF J	UMUET	
	C45 ,46			CC45FSL1H221J	CERAMIC 220PF J	E	
	C47 ,48			CE04KW0J222M	ELECTRO 2200UF 6.3WV		
	C49 ,50			CK45FB1H102K	CERAMIC 1000PF K		
	C61 ,62			CK45FE2H103P	CERAMIC 0.010UF P		
	C63 ,64			C90-0492-05	ELECTRO 10000UF 56WV		
	C65 ,66			CE04KW1J471M	ELECTRO 470UF 63WV		
	C67 ,68		*	CE04KW1J101M	ELECTRO 100UF 63WV		
	C69 ,70			CE04KW1H101M	ELECTRO 100UF 50WV		
	C71			CE04KW1A101M	ELECTRO 100UF 10WV		
	C72 -74			CE04KW1H010M	ELECTRO 1.0UF 50WV		
	C75			CE04KW1E101M	ELECTRO 100UF 25WV		
	C76			CE04KW1H470M	ELECTRO 47UF 50WV		
	C78			CE04KW1C220M	ELECTRO 22UF 16WV		
	C79		*	C90-1333-05	NP-ELEC 10UF 25WV		

E: Scandinavia & Europe H:Audio Club K: USA P: Canada
S: South Africa T: England U: PX(Far East, Hawaii)
UE. AAFES(Europe) X: Australia M: Other Areas

⚠ indicates safety critical components.

PARTS LIST

⁎ New Parts
Parts without **Parts No.** are not supplied.
Les articles non mentionnes dans le **Parts No.** ne sont pas fournis.
Telle ohne **Parts No.** werden nicht geliefert.

Ref. No. 参照番号	Address 位置	New Parts 新	Parts No. 部品番号	Description 部品名／規格	Destination 仕向	Remarks 備考
C80			CE04KW1V4R7M	ELECTRO 4.7UF 35WV		
C81			CE04KW1C470M	ELECTRO 47UF 16WV		
C82 ,83			CF92FV1H103J	MF 0.010UF J		
C84			CE04KW1H010M	ELECTRO 1.0UF 50WV		
C85 ,86		*	CE04KW2A010M	ELECTRO 1.0UF 100WV		
C87			CC45FSL1H820J	CERAMIC 82PF J		
59	1C		E23-0125-05	TERMINAL		
J1	1B		E20-0823-05	LOCK TERMINAL BOARD(8P)		
J2	1B		E13-0229-05	PHONO JACK (2P)		
J3	1B		E11-0156-05	PHONE JACK (3P)		
L1 ,2			L39-0080-15	PHASE-COMPENSATION COIL		
L3 ,4			L40-1011-47	SMALL FIXED INDUCTOR(100UH,K)	E	
G	1B		N09-0333-05	TAPPING SCREW (3X12)		
CP1 ,2			R90-0187-05	MULTI-COMP 0.22X2 K 5W		
R19 -22			RD14AB2E101JTS	FL-PROOF RD 100 J 1/4W		
R23 -26			RD14AB2E561JTS	FL-PROOF RD 560 J 1/4W		
R27 -30			RD14AB2E101JTS	FL-PROOF RD 100 J 1/4W		
R31 -34			RD14AB2E4R7JTS	FL-PROOF RD 4.7 J 1/4W		
R35 ,36		*	RD14AB2E302JTS	FL-PROOF RD 3.0K J 1/4W		
R37 -40			RD14AB2E102JTS	FL-PROOF RD 1.0K J 1/4W		
R41 ,42		*	RD14AB2E302JTS	FL-PROOF RD 3.0K J 1/4W		
R43 -46			RD14AB2E101JTS	FL-PROOF RD 100 J 1/4W		
R51 ,52		*	RD14AB2E5R6JTS	FL-PROOF RD 5.6 J 1/4W		
R53 ,54			RD14AB2E330JTS	FL-PROOF RD 33 J 1/4W		
R55 -58		*	RS14DB3D4R7JTE	FL-PROOF RS 4.7 J 2W		
R63 ,64			RS14DB3D561JTE	FL-PROOF RS 560 J 2W		
R91 ,92			RD14AB2E4R7JTS	FL-PROOF RD 4.7 J 1/4W		
R93		*	RS14DB3D181JTE	FL-PROOF RS 180 J 2W		
R94		*	RS14DB3D331JTE	FL-PROOF RS 330 J 2W		
R95 ,96			RD14AB2E220JTS	FL-PROOF RD 22 J 1/4W		
R97 ,98		*	RD14AB2E332JTS	FL-PROOF RD 3.3K J 1/4W		
R101,102			RD14AB2E100JTS	FL-PROOF RD 10 J 1/4W		
R112			RD14AB2E101JTS	FL-PROOF RD 100 J 1/4W		
R113			RD14AB2E100JTS	FL-PROOF RD 10 J 1/4W		
R114			RD14AB2E6R2JTS	FL-PROOF RD 6.2 J 1/4W		
R117		*	RS14DB3D392JTE	FL-PROOF RS 3.9K J 2W		
R126			RS14DB3D102JTE	FL-PROOF RS 1.0K J 2W		
R127,128			RS14DB3A182JTE	FL-PROOF RS 1.8K J 1W		
VR1 ,2			R12-0094-05	TRIMMING POT.(470) BIAS		
K1		*	S51-2078-05	MAGNETIC RELAY		
S1	1B	*	S29-4018-05	ROTARY SLIDE SWITCH(SPEAKER)		
S2	1C		S40-6027-05	PUSH SWITCH (CARTRIDGE)		
D1 ,2		*	MA27T(B)	VARISTOR		
D3 -8			1SS131	DIODE		
D3 -8			1SS178	DIODE		
⚠ D11 -14			S3V20	DIODE		
D15 ,16			1SS131	DIODE		
D15 ,16			1SS178	DIODE		
D17 ,18			1SS133	DIODE		
D17 ,18			1SS176	DIODE		
D19			DSM1A1	DIODE		
D20			RD5.1JS(B)	ZENER DIODE		

E: Scandinavia & Europe H:Audio Club K: USA P: Canada
S: South Africa T: England U: PX(Far East, Hawaii)
UE : AAFES(Europe) X: Australia M: Other Areas

⚠ indicates safety critical components.

PARTS LIST

* New Parts
Parts without **Parts No.** are not supplied.
Les articles non mentionnes dans le **Parts No.** ne sont pas fournis.
Teile ohne **Parts No.** werden nicht geliefert.

Ref. No. 参照番号	Address 位置	New Parts 新	Parts No. 部品番号	Description 部品名／規格	Destination 仕向	Remarks 備考
IC1			UPC1237H	IC(PROTECTION)		
Q1 ,2			2SC3419(Y)	TRANSISTOR		
Q3 ,4			2SC1845(F,E)	TRANSISTOR		
Q3 ,4			2SC1980(S,T)	TRANSISTOR		
Q5 ,6			2SC2590(Q,R,S)	TRANSISTOR		
Q7 ,8		*	2SC2837*5	TRANSISTOR		
Q9 ,10			2SA992(F,E)	TRANSISTOR		
Q11 ,12			2SA1110(Q,R,S)	TRANSISTOR		
Q13 ,14		*	2SA1186*5	TRANSISTOR		
Q15 ,16			2SC1845(F,E)	TRANSISTOR		
Q15 ,16			2SC1980(S,T)	TRANSISTOR		
Q17 ,18			2SA1127NC(R,S)	TRANSISTOR		
Q17 ,18			2SA733(A)(Q,P)	TRANSISTOR		
Q17 ,18			2SA999(E,F)	TRANSISTOR		
Q21			2SA992(F,E)	TRANSISTOR		
Q22			2SD882(Q,P)	TRANSISTOR		
Q23			2SB772(Q,P)	TRANSISTOR		
Q24			2SC1685(R,S)	TRANSISTOR		
Q24			2SC2320(E,F)	TRANSISTOR		
Q24			2SC945(A)(Q,P)	TRANSISTOR		
Q25 -27			2SA1127NC(R,S)	TRANSISTOR		
Q25 -27			2SA733(A)(Q,P)	TRANSISTOR		
Q25 -27			2SA999(E,F)	TRANSISTOR		
Q28			2SD1266(Q,P)	TRANSISTOR		
TONE AMP UNIT (X11-2222-72)						
63	2B		A33-0093-04	REFLECTOR		
D77 -85	2B		B30-1012-05	LED(SLP-981C-50)		
PL1 ,2	2B		B30-1025-05	LAMP (14V 0.08A)		
C1 ,2			CC45FSL1H101J	CERAMIC 100PF J		
C5 ,6			CE04KW1H010M	ELECTRO 1.0UF 50WV		
C7 ,8			CC45FSL1H101J	CERAMIC 100PF J		
C9 ,10			CC45FSL1H150J	CERAMIC 15PF J		
C11 ,12			CF92FV1H474J	MF 0.47UF J		
C13 -16			CF92FV1H334J	MF 0.33UF J		
C17 -20			CE04KW1V4R7M	ELECTRO 4.7UF 35WV		
C21 -24			CF92FV1H183J	MF 0.018UF J		
C25 ,26			CE04KW1H010M	ELECTRO 1.0UF 50WV		
C27 ,28			CK45FB1H561K	CERAMIC 560PF K		
C29 -46			CK45FB1H391K	CERAMIC 390PF K	E	
C47 ,48			C91-0753-05	CERAMIC 470PF K	E	
C101,102			CE04KW1E101M	ELECTRO 100UF 25WV		
C103,104			CF92FV1H103J	MF 0.010UF J		
C105			CE04KW1A101M	ELECTRO 100UF 10WV		
C106		*	C91-0789-05	BACKUP C 0.047F		
C107			CF92FV1H103J	MF 0.010UF J		
C108			CE04KW1E101M	ELECTRO 100UF 25WV		
C109			CF92FV1H473J	MF 0.047UF J		
C110			CE04KW1E101M	ELECTRO 100UF 25WV		
C111			CF92FV1H103J	MF 0.010UF J		
C112-114			CE04KW1E470M	ELECTRO 47UF 25WV		
C115,116			CE04KW1E101M	ELECTRO 100UF 25WV		
J1	1C		E13-0223-05	PHONO JACK (2P)PHONO		
J2 ,3	1C		E13-0818-05	PHONO JACK (8P)TAPE,INPUT		

E: Scandinavia & Europe H:Audio Club K: USA P: Canada
S: South Africa T: England U: PX(Far East, Hawaii)
UE: AAFES(Europe) X: Australia M: Other Areas

⚠ indicates safety critical components.

PARTS LIST

* New Parts
Parts without **Parts No.** are not supplied.
Les articles non mentionnes dans le **Parts No.** ne sont pas fournis.
Telle ohne **Parts No.** werden nicht geliefert.

Ref. No. 参照番号	Address 位置	New Parts 新	Parts No. 部品番号	Description 部品名／規格	Destination 仕向	Remarks 備考
J4	2B		E13-0233-05	PHONO JACK (2P)AUX/VIDEO		
67	1B		G11-1098-04	SOFT TAPE		
CP1			R90-0274-05	MULTI-COMP 47KX5 J 1/6W		
R101,102			RD14AB2E4R7JTS	FL-PROOF RD 4.7 J 1/4W		
R103,104			RD14AB2E100JTS	FL-PROOF RD 10 J 1/4W		
R135		*	RS14DB3A392JTE	FL-PROOF RS 3.9K J 1W		
R136		*	RS14DB3A472JTE	FL-PROOF RS 4.7K J 1W		
R137,138		*	RD14GB2E471JTS	FL-PROOF RD 470 J 1/4W		
VR1	2B	*	R06-5145-05	POTENTIOMETER(200K)BALANCE		
VR2	2B	*	R06-5144-05	POTENTIOMETER(100K)VOLUME		
VR3 ,4	2B	*	R06-3051-05	POTENTIOMETER(10K) BASS,TREBLE		
S1 ,2	2C		S90-0038-05	SLIDE SWITCH REC OUT		
S3	2B		S40-4062-05	PUSH SWITCH MUTING		
S5	2B		S40-4062-05	PUSH SWITCH LINE STRAIGHT		
S6	2B		S40-2200-05	PUSH SWITCH SUPER BASS		
S7 -12	2B		S40-1064-05	PUSH SWITCH TAPE,INPUT		
D1 -66			1SS133	DIODE		
D1 -66			1SS176	DIODE		
D67			DSM1A1	DIODE		
D70			RD5.6JS(B2)	ZENER DIODE		
D71 ,72			RD13E(B2)	ZENER DIODE		
D73 -75			RD16E(B)	ZENER DIODE		
D87 -93		*	MA156	DIODE		
IC1		*	LC7818	IC(ELECTRO CONTROL SWITCH (2H)		
IC2			NJM2068D-D	IC(OP AMP X2)		
Q1			2SC1845(F,E)	TRANSISTOR		
Q2			2SA992(F,E)	TRANSISTOR		
Q3			2SA733(A)(Q,P)	TRANSISTOR		
Q3			2SA999(E,F)	TRANSISTOR		
Q4			2SC2320(E,F)	TRANSISTOR		
Q4			2SC945(A)(Q,P)	TRANSISTOR		
Q5 ,6			2SA733(A)(Q,P)	TRANSISTOR		
Q5 ,6			2SA999(E,F)	TRANSISTOR		
Q7 ,8			2SC2878	TRANSISTOR		
Q9			2SC2320(E,F)	TRANSISTOR		
Q9			2SC945(A)(Q,P)	TRANSISTOR		
PRE AMP UNIT (X85-1010-10)						
C1 ,2			CF92FV1H392J	MF 3900PF J		
C3 ,4			CF92FV1H113J	MF 0.011UF J		
C5 ,6			CF92FV1H393J	MF 0.039UF J		
C7 ,8			CE04HW1E100MEL	NP-ELEC 10UF 25WV		
R7 ,8			RN14BK2C6811FTS	RN 6.81K F 1/6W		
R9 ,10			RN14BK2C8252FTS	RN 82.5K F 1/6W		
IC1			NJM4560D-N	IC(OP AMP X2)		
Q5 -8			2SK170(BL)	FET		
Q5 -8			2SK170(V)	FET		
MAIN AMP UNIT (X85-1070-01)						
D1 -8			1SS176	DIODE		
Q1 -4			2SC1845(F,E)	TRANSISTOR		
Q5 -8			2SA733(A)	TRANSISTOR		
Q13 ,14			2SC945(A)(Q,P)	TRANSISTOR		
Q15 ,16			2SC2632(Q,R,S)	TRANSISTOR		

E: Scandinavia & Europe **H**:Audio Club **K**: USA **P**: Canada
S: South Africa **T**: England **U**: PX(Far East, Hawaii)
UE : AAFES(Europe) **X**: Australia **M**: Other Areas

⚠ indicates safety critical components.

PARTS LIST

⁎ New Parts
Parts without **Parts No.** are not supplied.
Les articles non mentionnes dans le **Parts No.** ne sont pas fournis.
Teile ohne **Parts No.** werden nicht geliefert.

Ref. No. 参照番号	Address 位置	New Parts 新	Parts No. 部品番号	Description 部品名／規格	Destination 仕向	Remarks 備考
Q17 ,18			2SA999(E,F)	TRANSISTOR		
Q19 ,20			2SA1124(Q,R,S)	TRANSISTOR		

E: Scandinavia & Europe H:Audio Club K: USA P: Canada
S: South Africa T: England U: PX(Far East, Hawaii)
UE : AAFES(Europe) X: Australia M: Other Areas

⚠ indicates safety critical components.

SPECIFICATIONS

Power output

60 watts per channel minimum RMS, both channels driven at 8ohms from 20Hz to 20,000Hz with no more than 0.02% total harmonic distortion

Maximum Continuous Power Output (DIN) 1kHz at 4ohms	98W + 98W
Maximum Continuous Power Output (DIN) 1kHz at 8ohms	73W + 73W
Maximum Continuous Power Output (IEC/NF) from 63Hz to 12,500Hz, 0.7% Total Harmonic Distortion at 8ohms	72W + 72W
Total Harmonic Distortion	
(20Hz-20,000Hz, 8ohms)	0.009% at 30W
(1kHz , 8ohms)	0.009% at 60W
Inter Modulation Distortion	0.02% at 60W
Frequency Response	
PHONO "RIAA" Response	20Hz-20,000Hz, ±0.3dB
TUNER/CD/AUX/TAPE	1Hz-70,000Hz, +0dB, −3dB
Signal to Noise Ratio (IHF-A)	
PHONO (MM)	86dB
PHONO (MC)	68dB
TUNER/CD/AUX/TAPE	100dB
Signal to Noise Ratio at Unweighted, 50mW Output (DIN)	
PHONO (MM)	60dB
PHONO (MC)	60dB
TUNER/CD/AUX/TAPE	61dB
Input Sensitivity/Impedance	
PHONO (MM)	2.5mV/47kohms, 690pF
PHONO (MC)	200μV/100ohms, 690pF
TUNER/CD/AUX/TAPE	150mV/47kohms
Phono Maximum Input Level	
(MM)	180mV, 0.008% T.H.D. at 1kHz
(MC)	14mV, 0.008% T.H.D. at 1kHz
Output Level/Impedance	
TAPE REC	150mV/220ohms
ADAPTOR OUT	150mV/300ohms
PRE OUT	2V/600ohms
Channel Separation (DIN) at 1,000Hz	
PHONO (Terminated with 2.2kohms)	60dB
AUX (Terminated with 47kohms + 250pF)	55dB
Tone Control	
TREBLE	±10dB at 10kHz
BASS	±10dB at 100 Hz
Super Bass	+5dB at 30Hz

GENERAL

Power Requirements	120V/220V, 50/60Hz ..... European Model 240V, 50Hz ..... U.K. Model 110-120V/220-240V, 50/60Hz ..... Other Models
Power Consumption	230watts at Rated Output Power into 8ohms 29watts at No Signal
Dimensions	W 340mm (13-3/8") H 119mm (4-11/16") D 368mm (14-1/2")
Weight (Net) **(IHF'66)**	7.6kg (16.7lb)

Note:
We follow a policy of continuous advancements in development. For this reason specifications may be changed without notice.

TRIO-KENWOOD CORPORATION
Shionogi Shibuya Building, 17-5, 2-chome Shibuya, Shibuya-ku, Tokyo 150, Japan

KENWOOD ELECTRONICS
DIVISION OF KENWOOD U.S.A. CORPORATION
1315 E. Watsoncenter Rd., Carson, California 90745; U.S.A.
75 Seaview Drive, Secaucus, New Jersey 07094, U.S.A.

TRIO-KENWOOD CANADA INC.,
1070 Jayson Court, Mississauga, Ontario, Canada L4W 2V5

TRIO-KENWOOD ELECTRONICS, N.V.
Leuvensesteenweg 504 B-1930 Zaventem, Belgium

TRIO-KENWOOD ELECTRONICS GmbH
Rembrücker Str. 15, 6056 Heusenstamm, West Germany

TRIO-KENWOOD FRANCE S.A.
5, Boulevard Ney, 75018 Paris, France

TRIO-KENWOOD (AUSTRALIA) PTY. LTD. (INCORPORATED IN N.S.W.)
4E Woodcock Place, Lane Cove, N.S.W. 2066, Australia

KENWOOD & LEE ELECTRONICS, LTD.
Wang Kee Building, 5th Floor, 34-37, Connaught Road, Central, Hong Kong